Pillar with call point
1:12

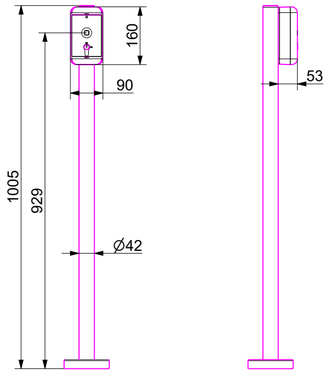

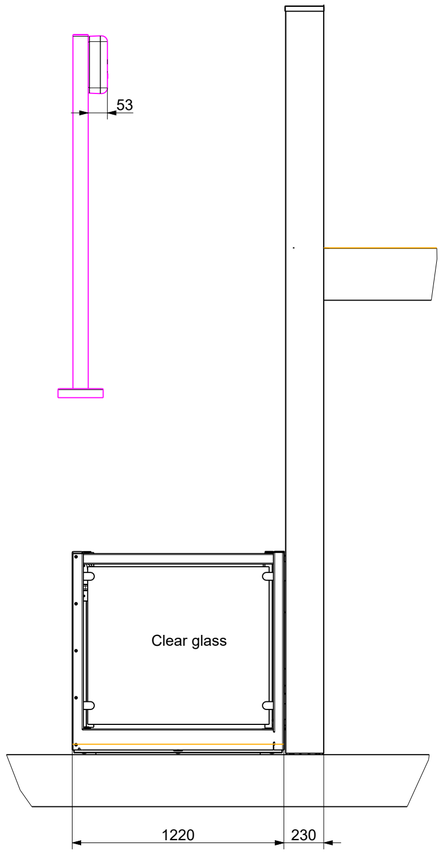

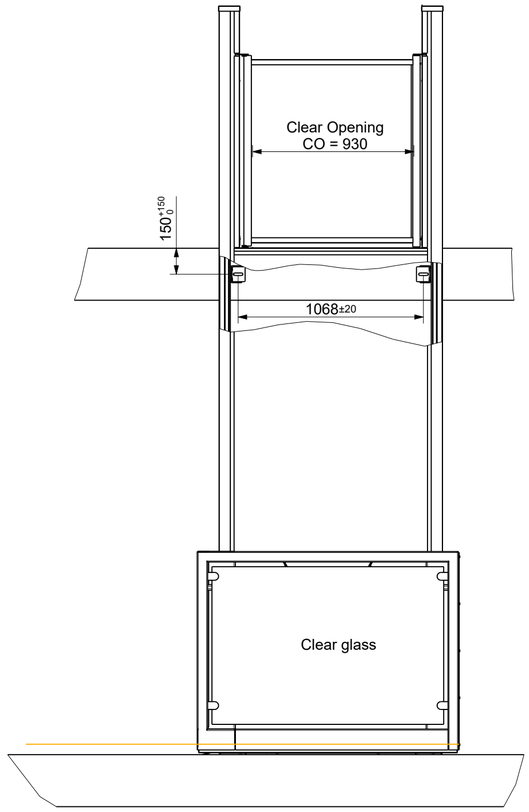

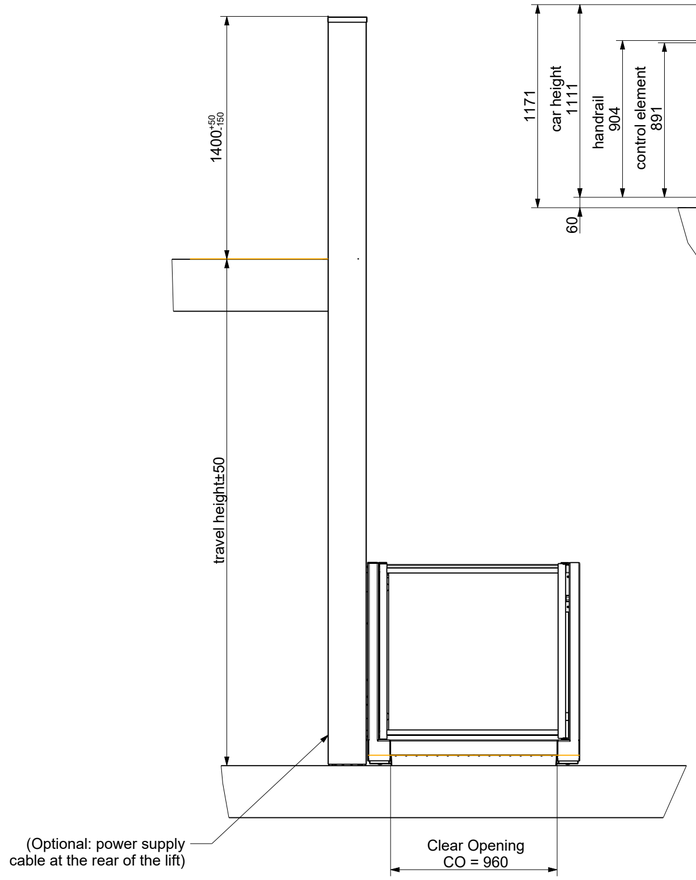

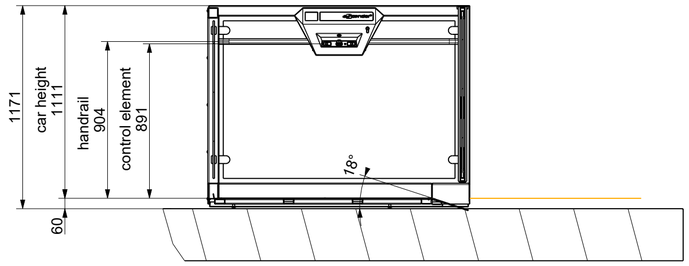

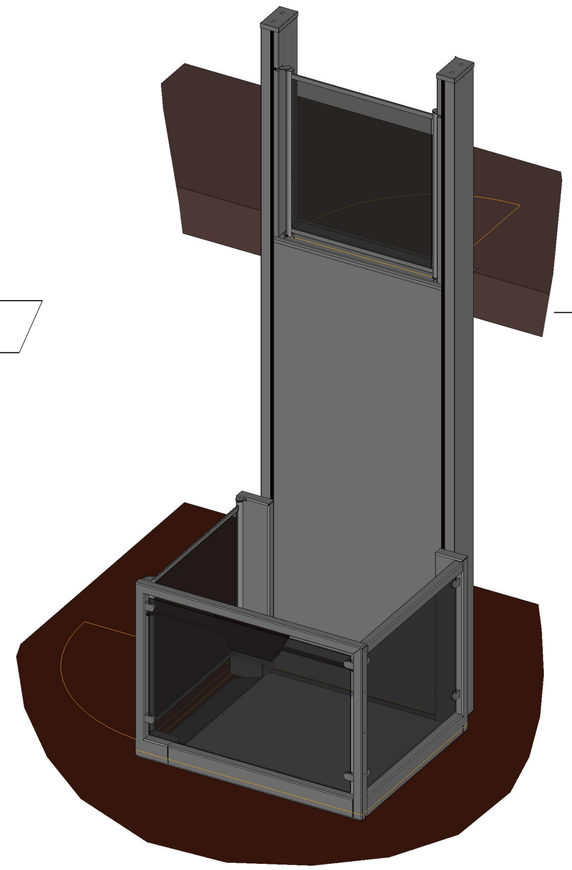

Platform vertical lift &PRODUCT:1:

travel height: 2920 mm
platform size: 1400x1100mm
load capacity: 385kg
colour design: Anodised aluminium + metallic grey
colour design: -
travel speed: max. 0,15m/sec.

- Installation location: Indoor facility/outdoor facility

- Extended access ramp: Yes/No
- Safety contact strip: No/Left/Right/Both sides
- Encryption: Standard profile cylinder/EuroKey
- Additional control panel with illuminated control buttons: No
- Handrail for additional control panel: No
- Emergency call via GSM voice connection incl. SMS remote query: Yes/No
- Voice output: Yes/No
- Indirect RGB lighting in the car: Yes/No

- Rear panel: Yes/No

- Access at bottom
 Access side: L(/R)
 Design: Car door
 Door swing: DIN-L(/DIN-R)
 Automatic door drive: Yes/No

- Access at the top
 Entrance side: H
 Design: Lift column door
 Door hinge: DIN-L/DIN-R
 Automatic door drive: Yes/No
 Top transition design: Standard (0 mm)/transition plate (200 mm)/folding threshold

- External control: 2x wireless wall switch incl. standard profile cylinder/incl. EuroKey
- Column(s) free-standing for wireless wall switch: 0 pcs/1 pc/2 pcs.

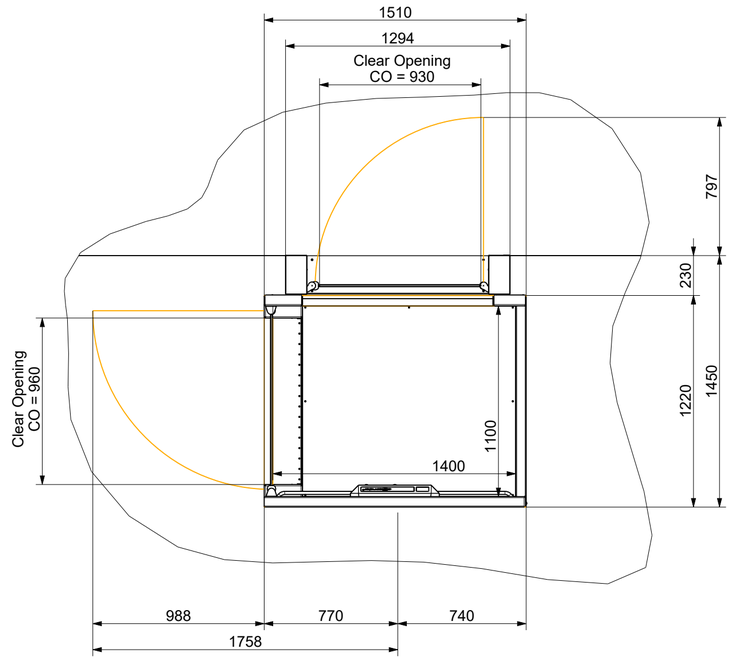

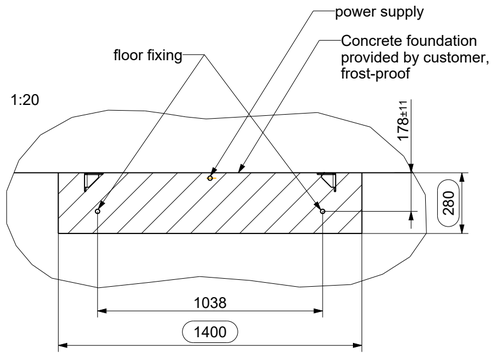

File name of the drawing object: 515101-1400X1100-UP7				file type: ASSEM	File name of the drawing object: 515101-1400X1100-UP7	
			Allgemeintol. DIN ISO 2768-m-H	Kanten DIN ISO 13715	scale 1:25	Gew.:0.000kg
					Werkstoff: Halbzeug: -	
			Bear.	Datum: dd.mm.jjjj	Name: VoNa	naming: UnaPorte90 left with lift column door Ascendor Sample drawing
			Gepr.			
			Norm			
			ascendor® LIFTTECHNIK		drawing number: ANG-000000	Blatt2 / 2 Bl.
Zust.	Änderung	Datum	Nam.	(Urspr.)	(Ers.f.:)	(Ers.d.:)